PROJECT 16: Design and Analysis of NAND Gate by using Cadence Virtuoso

A Comprehensive Study of Analog Circuits

By: Priya Chaudhary, Astitva Johri and Bhavya Solanki

Chapters:

List of Figures……..……. 3

1. Introduction …….. 4
2. Brief Description…… 5
3. Circuit Design……. 6-7
   3.1 Schematic Design……... 6
   3.2 Simulation.....…….. 6
4. Simulation Results…….. 8
5. Advantages and Disadvantages…….. 9
   5.1 Advantages……. 9
   5.2 Disadvantages……. 9
6. Conclusion…….. 10
7. Frequently Asked Questions (FAQs)…….. 11

LIST OF FIGURES

Figure 3.1 Symbol of NAND Gate…….…... 7

Figure 3.2 Circuit of NAND Gate…….……... 7

Figure 4.1 Simulation Results of NAND Gate……... 8

1. INTRODUCTION

The NAND gate, a fundamental component of digital electronics, combines the NOT and AND operations into a single logical function. Its ability to perform universal logic makes it indispensable in the design of complex digital circuits. NAND gates are used extensively in a variety of applications, including microprocessors, memory devices, and control systems.

The goal of this document is to bridge theoretical understanding with practical implementation, showcasing how to build, simulate, and optimize a NAND gate for real-world applications.

The design process encompasses three main stages: creating a transistor-level schematic, developing a physical layout that adheres to fabrication rules, and conducting simulations to evaluate performance parameters such as delay, power consumption, and signal integrity. By mastering these stages, designers can ensure that the NAND gate operates as intended and meets the required specifications for digital circuits.

2. BRIEF DESCRIPTION

The NAND gate is a digital logic gate that outputs a logic LOW only when all its inputs are at logic HIGH. The NAND gate is often referred to as a "universal gate" due to its capability to implement all other basic logic gates, such as AND, OR, NOT, NOR, and XOR. This versatility makes it a cornerstone in the design of digital systems.

In CMOS (Complementary Metal-Oxide-Semiconductor) technology, the NAND gate is constructed using two PMOS transistors in the pull-up network and two NMOS transistors in the pull-down network. The pull-up network ensures that the output is driven HIGH when the inputs are LOW, while the pull-down network pulls the output LOW when the inputs are HIGH. This complementary arrangement ensures low power dissipation during steady-state operation and high noise immunity.

Key features of a NAND gate include:

- **Compactness**: The NAND gate design is efficient in terms of transistor count, making it suitable for large-scale integration.
- **Power Efficiency**: CMOS NAND gates consume minimal power, as current flows only during switching events.
- **Robustness**: The design is highly reliable and can operate across a wide range of supply voltages and temperatures.

3. CIRCUIT DESIGN

3.1 Schematic Design

1. **Create a New Cell**: In Cadence Virtuoso, create a new library and a new cell titled "NAND_Gate."
2. **Place Transistors**: Place two PMOS and two NMOS transistors.
3. **Connections**:
   - Connect the source of PMOS to VDD and the source of NMOS to GND.
   - Connect the gates of both PMOS and NMOS to inputs A and B.
   - Connect the drains of PMOS and NMOS together at the output terminal.
4. **Add Terminals**: Label the input terminals as A and B and the output as "Out."
5. **Power Supply**: Connect VDD to the source of PMOS and GND to the source of NMOS.

3.2 Simulation

1. **Simulation Type**: Choose "Transient" analysis.
2. **Define Input**: Apply pulse signals for inputs A and B (0V for logic low and 5V for logic high).
3. **Simulation Time**: Set the total simulation time and the time step.
4. Run the simulation to observe the output behavior.

After running the simulation, observe the output in the waveform viewer.
The output should be:

- Logic high (5V) when at least one input is low.
- Logic low (0V) when both inputs are high.

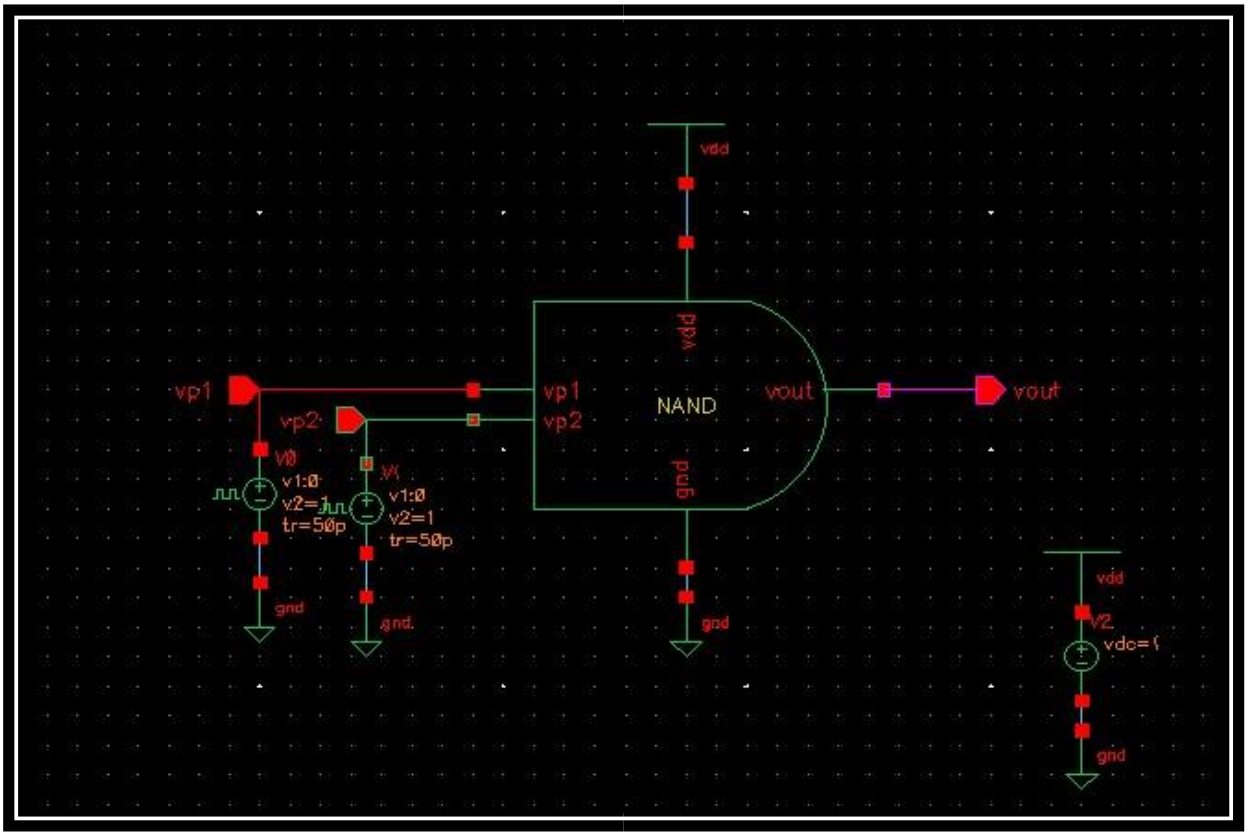

Figure 3.1 Symbol of NAND Gate

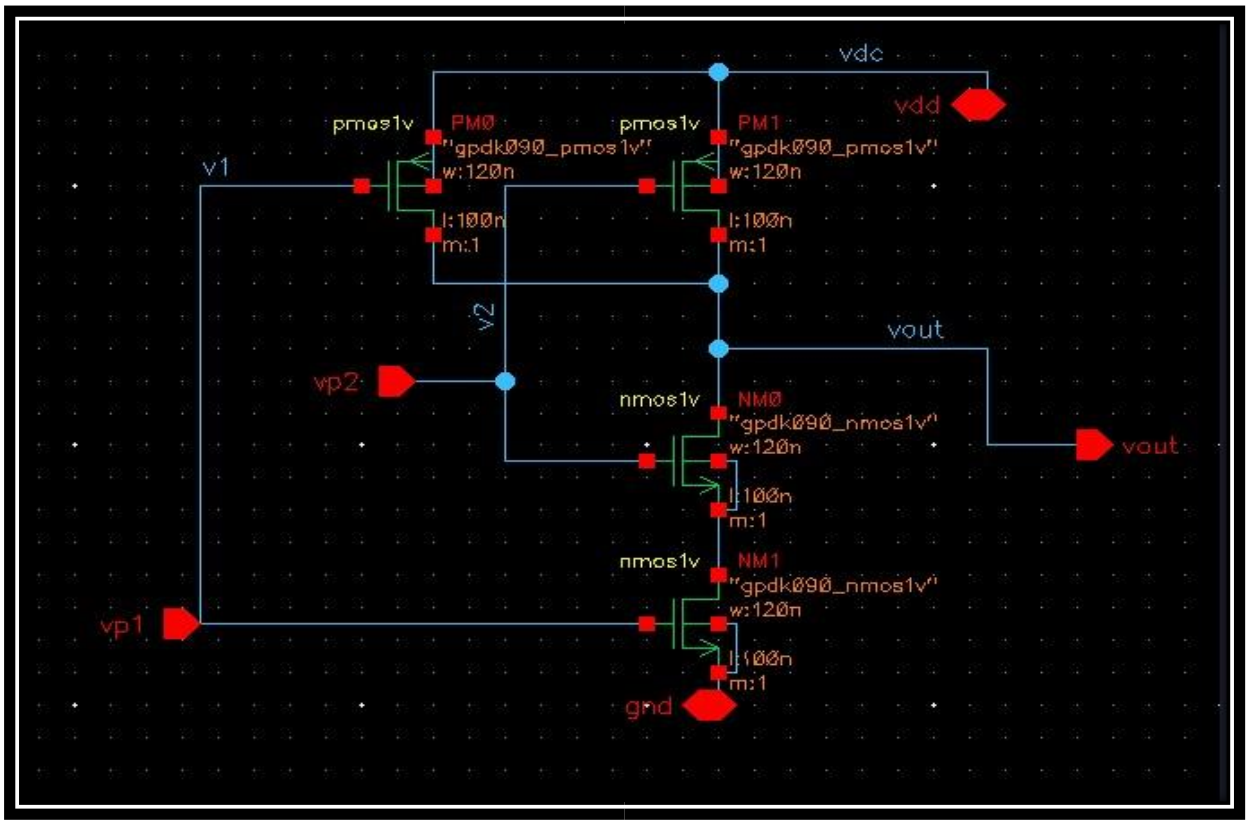

Figure 3.2 Circuit of NAND Gate

4. SIMULATION RESULTS

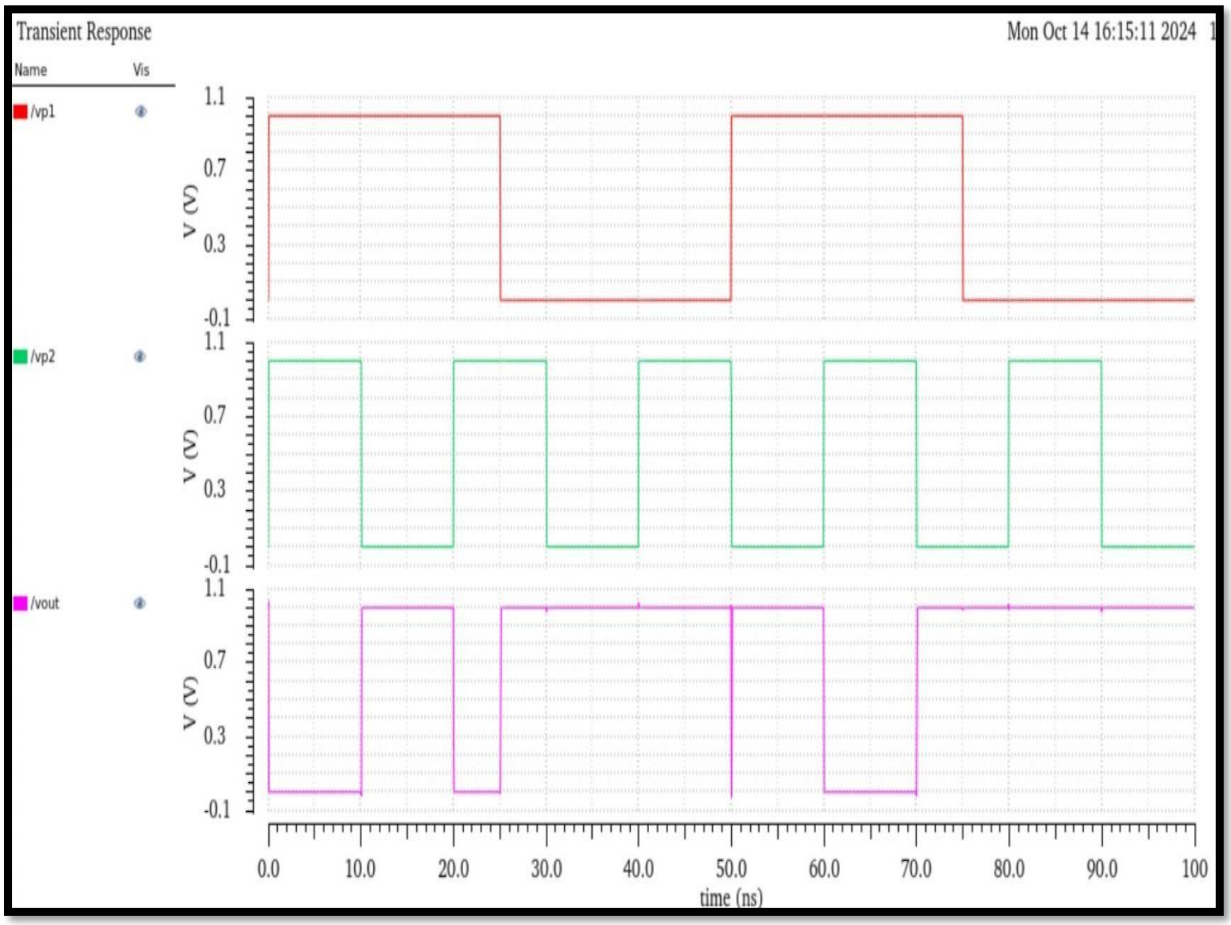

Figure 4.1: Simulation Results of NAND Gate

5. ADVANTAGES AND DISADVANTAGES

5.1 Advantages:-

1. **Low Power Consumption**: CMOS NAND gates, consume less power compared to other logic gates like TTL.
2. **High Noise Margins**: CMOS circuits have high noise margins, making them more resilient to variations in voltage and current.
3. **High Speed**: CMOS NAND gates are relatively fast, making them suitable for high-performance applications.
4. **Scalability**: The design can be easily scaled for larger circuits due to its simplicity.

5.2 Disadvantages:-

1. **Complexity of Design:** While simple gates can be designed easily, larger and more complex circuits may require extensive layout and design considerations.
2. **Susceptibility to Process Variations:** Performance can degrade due to process variations such as temperature and voltage fluctuations.
3. **Requires Higher Chip Area:** In certain configurations, the CMOS technology may require more chip area, which impacts overall cost and performance**.**

6. CONCLUSION

The design and analysis of a NAND gate using Cadence Virtuoso provide a detailed understanding of digital circuit design at the transistor level. This process not only reinforces theoretical concepts but also equips designers with practical skills essential for developing robust and efficient digital systems.

Through the schematic design, we gain insights into the transistor-level implementation of logic functions. The layout design phase highlights the importance of adhering to design rules and minimizing parasitic effects to ensure reliable operation. Simulations further validate the design by assessing critical performance parameters such as propagation delay, power consumption, and signal integrity.

The NAND gate's versatility as a universal gate underscores its significance in digital electronics. By mastering its design and analysis in Cadence Virtuoso, engineers can confidently approach more complex circuits and systems. This documentation serves as a comprehensive resource for students, researchers, and professionals aiming to deepen their understanding of digital circuit design using advanced EDA tools.

7. FREQUENTLY ASKED QUESTIONS (FAQs)

Q1. What is the significance of a NAND gate in digital electronics?

Answer: The NAND gate is a universal gate, meaning it can be used to implement any other logic gate or digital circuit, making it a fundamental component in digital design.

Q2. Why use Cadence Virtuoso for NAND gate design?

Answer: Cadence Virtuoso provides a comprehensive platform for designing, simulating, and verifying custom ICs, making it ideal for precise and efficient NAND gate design.

Q3. What parameters should be analyzed during simulation?

Answer: Key parameters include propagation delay, power consumption, noise margin, and output voltage levels.

Q4. How can parasitic effects be minimized in layout design?

Answer: Parasitic effects can be minimized by ensuring proper spacing, using shorter interconnects, and following design rule guidelines.

Q5. What are the typical applications of NAND gates?

Answer: NAND gates are used in memory circuits, microprocessors, and digital signal processing systems.